Smartscreen Wiper Wiring

©CJH 2009 (www.ngkitcar.co.uk)

Electrical connections

The fitting is quite straighforward, the majority of the 6 connections being in the vicinity of the wiper switch. The bladed terminals are labelled (from L to R) Sw, -ve, +ve, W, Wsh, P and are connected as follows (see diagram):

1. connect Sw to the first speed wiper supply terminal on the wiper switch (terminal 6 on my Lucas toggle switch), remove the existing wire (to the motor) and connect to W (red/light green)
2. connect -ve to a convenient earth (black)
3. connect +ve to live feed - easiest to tap into the supply on the wiper switch (terminal 4, green)
4. connect Wsh to washer switch terminal which supplies the pump (light green/black)
5. connect P to the park terminal on the switch (terminal 2, brown/green)

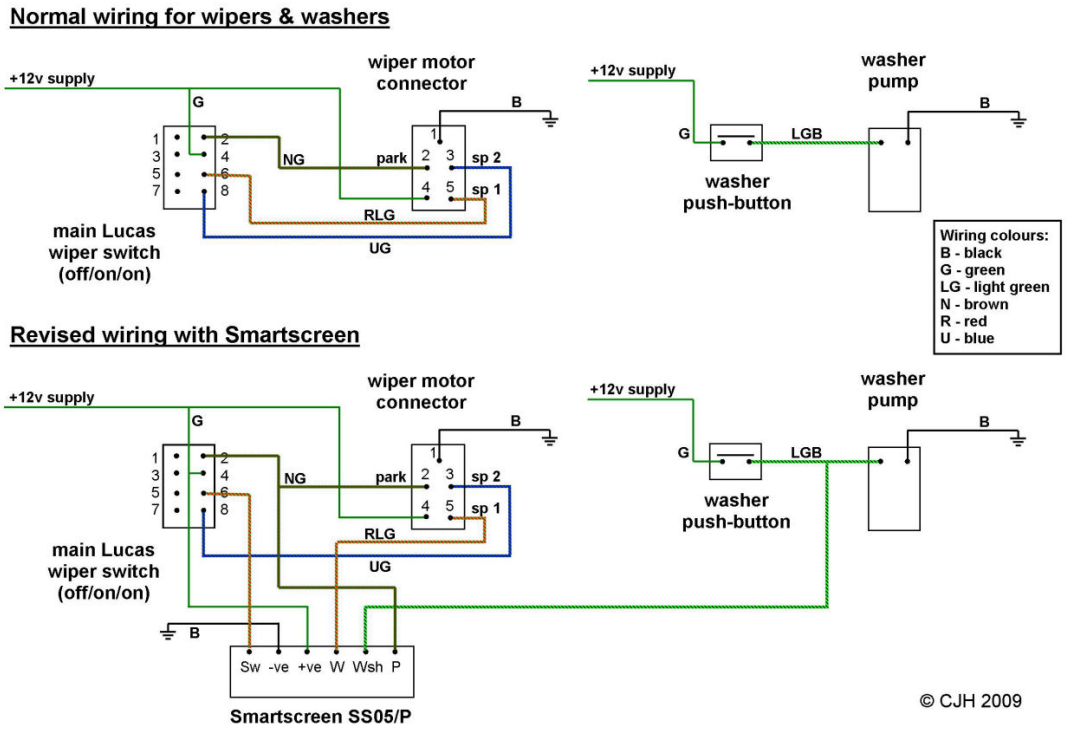

Operation

The principle of operation is that a repeat is 'programmed' using the standard wiper switch. The Smartscreen unit remembers the interval (anything between 3 and 30 seconds) between switching and repeats it. The unit fitted (the SS05/P) triggers the wipers for a few wipes whenever the electric washers are used.